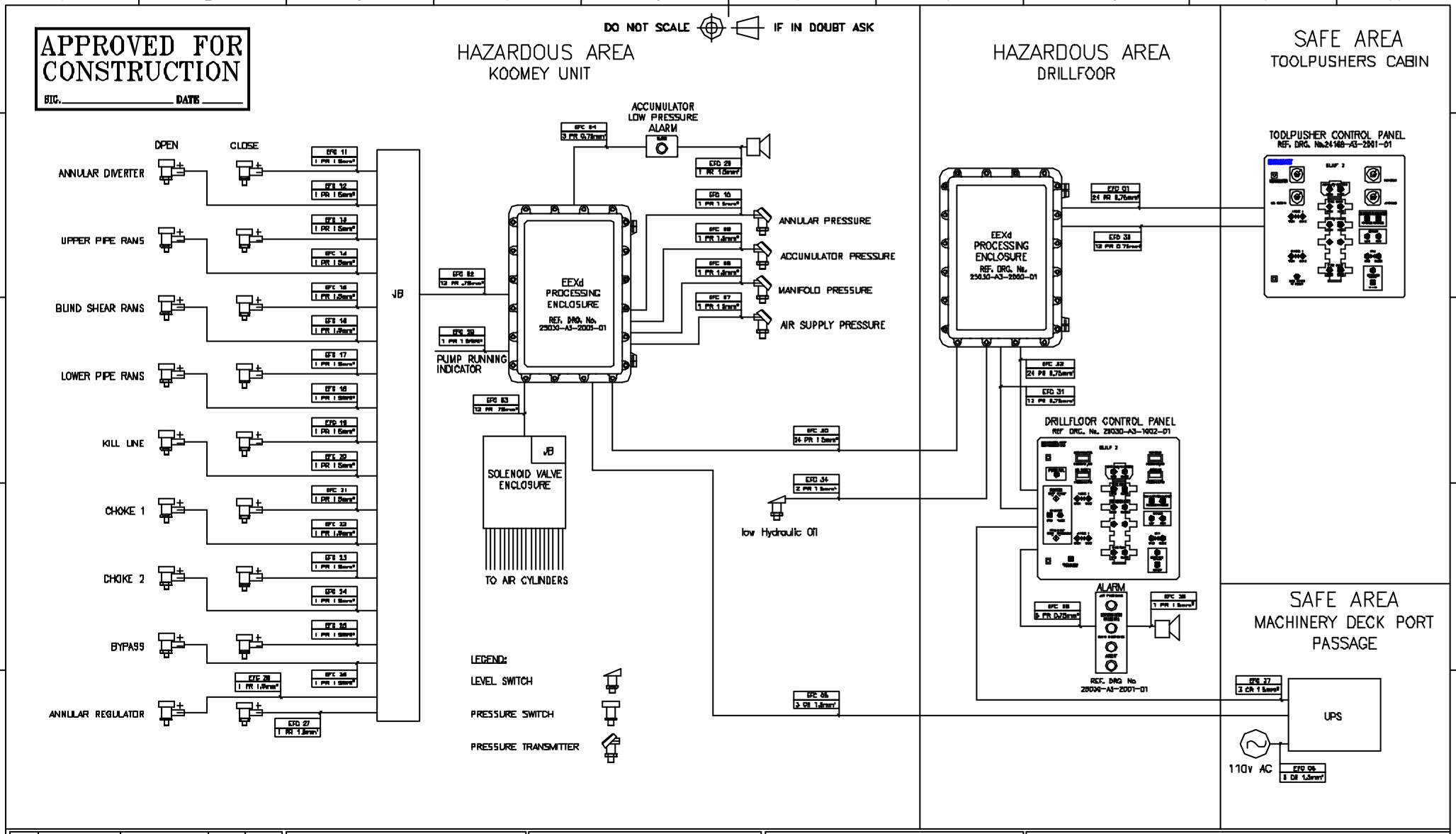

REV	DATE	CHANGE No	DRN	CHK
C3	04/03/05	DER 627	D H	C.P
C2	3/02/05	DER 627	D.H.	GP
C1	27/01/05	DER 627	D.H.	K.W.

MATERIAL :

TOLERANCE 000 ± 1mm
00 00 ± 0.5mm
00.000 ± 0.1mm
UNLESS OTHERWISE STATED

FINISH

SCALE : N.T.S

DIMENSIONS IN MILLIMETRES

ELECTRO-FLOW CONTROLS
OILFIELD INSTRUMENTATION

HOUSTON TEXAS
T: 713 488 5325
F: 713 488 3498

ABERDEEN SCOTLAND
T: 01224 249355
F: 01224 249339

© THIS DOCUMENT IS ISSUED IN CONFIDENCE FOR THE PURPOSE ONLY FOR WHICH IT IS SUPPLIED IT MUST NOT BE REPRODUCED IN WHOLE OR IN PART OR USED FOR TENDERING OR MANUFACTURE EXCEPT UNDER AGREEMENT FROM "ELECTRO-FLOW CONTROLS Ltd." AND THEN ONLY ON THE CONDITION THAT THIS NOTICE IS INCLUDED IN ANY REPRODUCTION

FILE NAME 0001-01.dwg

JOB No. 25030

CLIENT / PROJECT :

TITLE
REMOTE BOP CONTROL PANEL
SINGLE LINE SCHEMATIC

DRG No. : 25030-A3-0001-01

SHEET 1 OF 1

100 MILLIMETRES FULL SIZE